PRODUCT NAME

Post & leaning rail fence

2m lengths x 1200mm high – leaning rail fence – PR1200/L/2

SIZE	PART NO.
Posts 150 x 100, Rails 108 x 50	PR1200/L/2
PAGE NO. 08A	© PROTECTED BY PATENT May 2008 J.S

DURALOCK PERFORMANCE FENCING

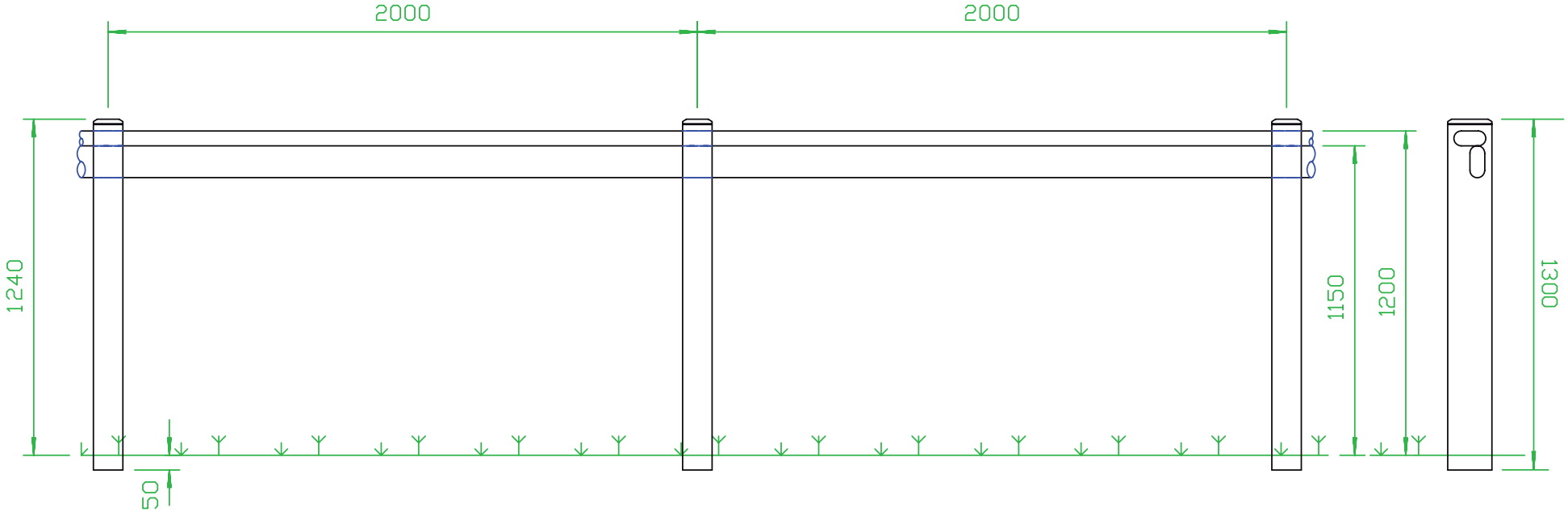

Duralock Fencing Systems Ltd reserve the right to alter specifications without notice.

All dimensions are nominal. Please check if critical.