PRODUCT NAME

Crowd barrier fence

2m lengths x 1100mm high crowd barrier with weldmesh infill

SIZE	PART NO.
Posts 150 x 100, Rails 108 x 50	P12

PAGE NO.	© PROTECTED BY PATENT
12	April 2004 G.B.

DURALOCK PERFORMANCE FENCING

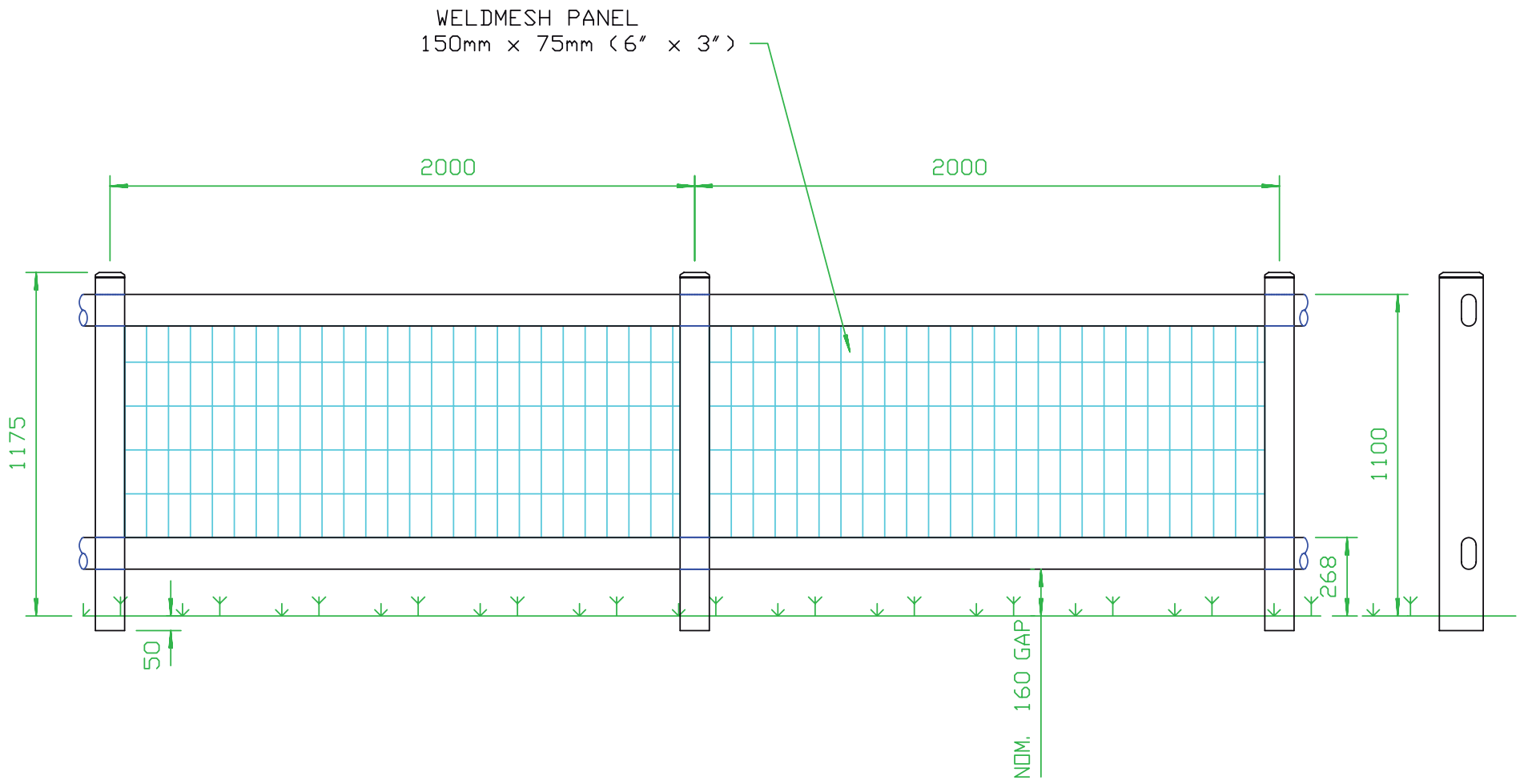

Duralock Fencing Systems Ltd reserve the right to alter specifications without notice.

All dimensions are nominal. Please check if critical.