PRODUCT NAME

Post & 4 rail fence

2m lengths x 1800mm high 4 rail fence

SIZE	PART NO.
Posts 100 x 100, Rails 108 x 50	P17A

PAGE NO.	© PROTECTED BY PATENT
17A	Mar 2004 G.B.

DURALOCK PERFORMANCE FENCING

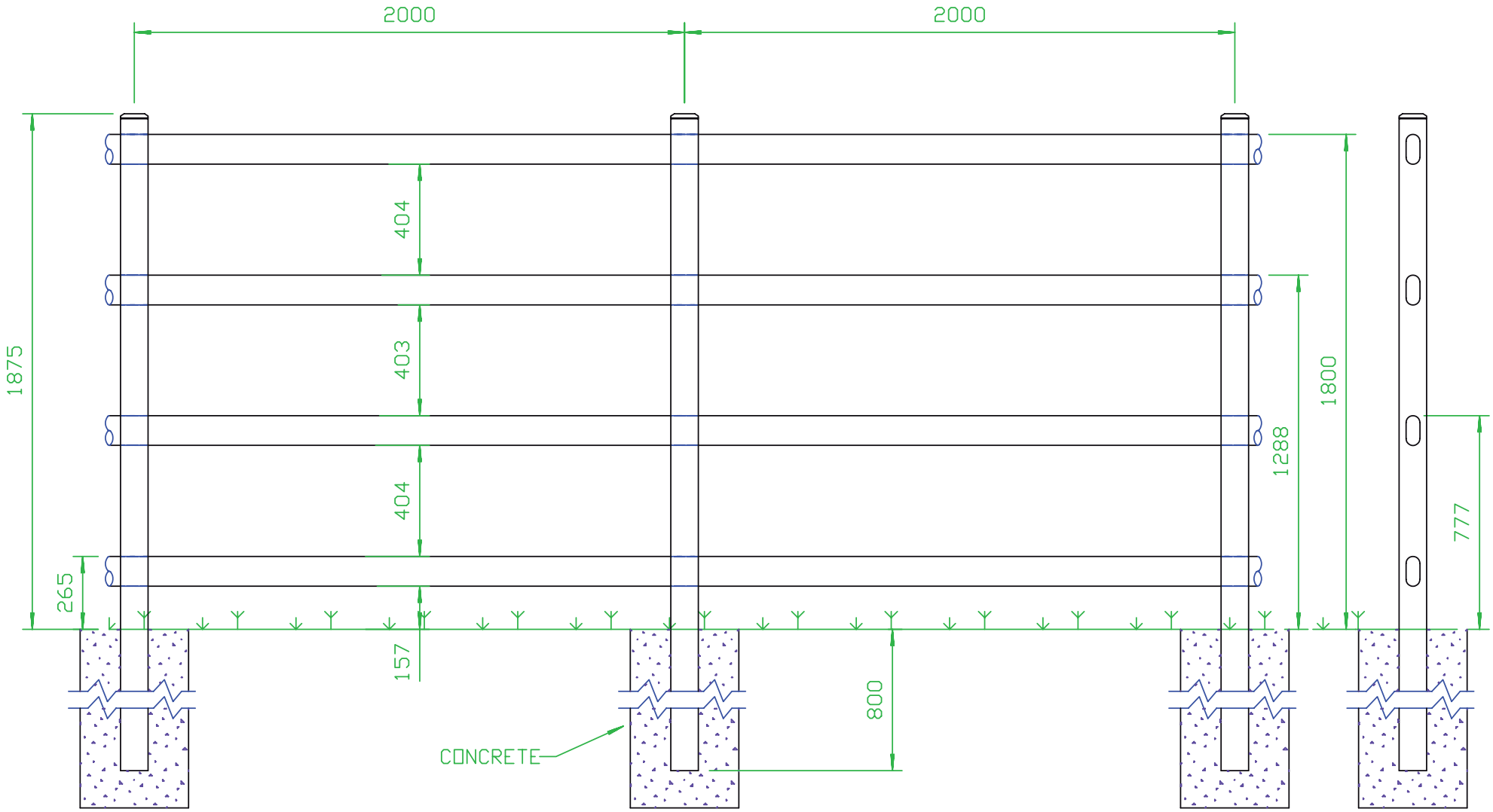

Duralock Fencing Systems Ltd reserve the right to alter specifications without notice.

All dimensions are nominal. Please check if critical.